LGC Update

SoLID Collaboration Meeting
06/08/18

Michael Paolone
Hamza Atac, Burcu Duran, Sylvester Joosten, Zein-Eddine Meziani, Melanie Rehfuss, Nikos Sparveris

Temple University

Small Cherenkov Prototype

- Formerly known as the "bazooka" cherenkov.
  - Goal: To test a small MaPMT array under high rate (parasitic)
  - Set up at the test-lab at JLAB.
  - Cosmic tests have been performed.

Selfie

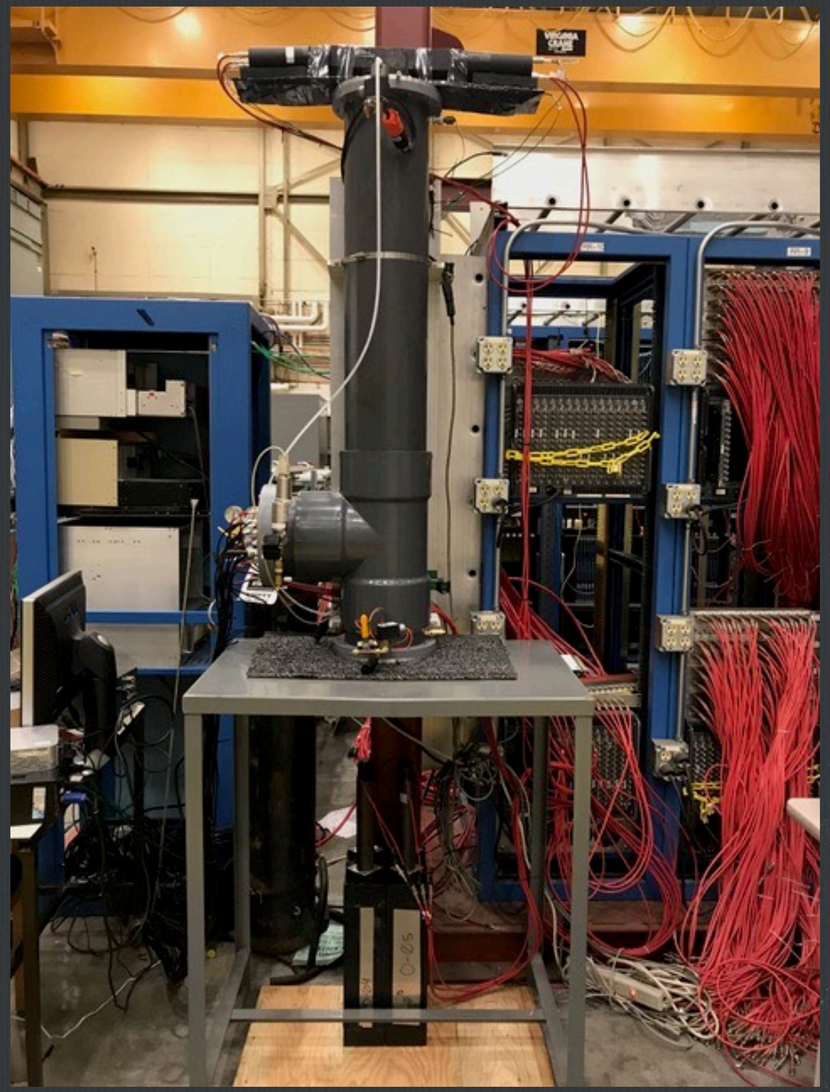

Portrait

Small Cherenkov Prototype

- Formerly known as the "bazooka" cherenkov.
  - Goal: To test a small MaPMT array under high rate (parasitic)
  - Set up at the test-lab at JLAB.
  - Cosmic tests have been performed.

Trigger is formed by coincidence between:
1 of 2 scintillator paddles
1 of 4 calorimeter blocks

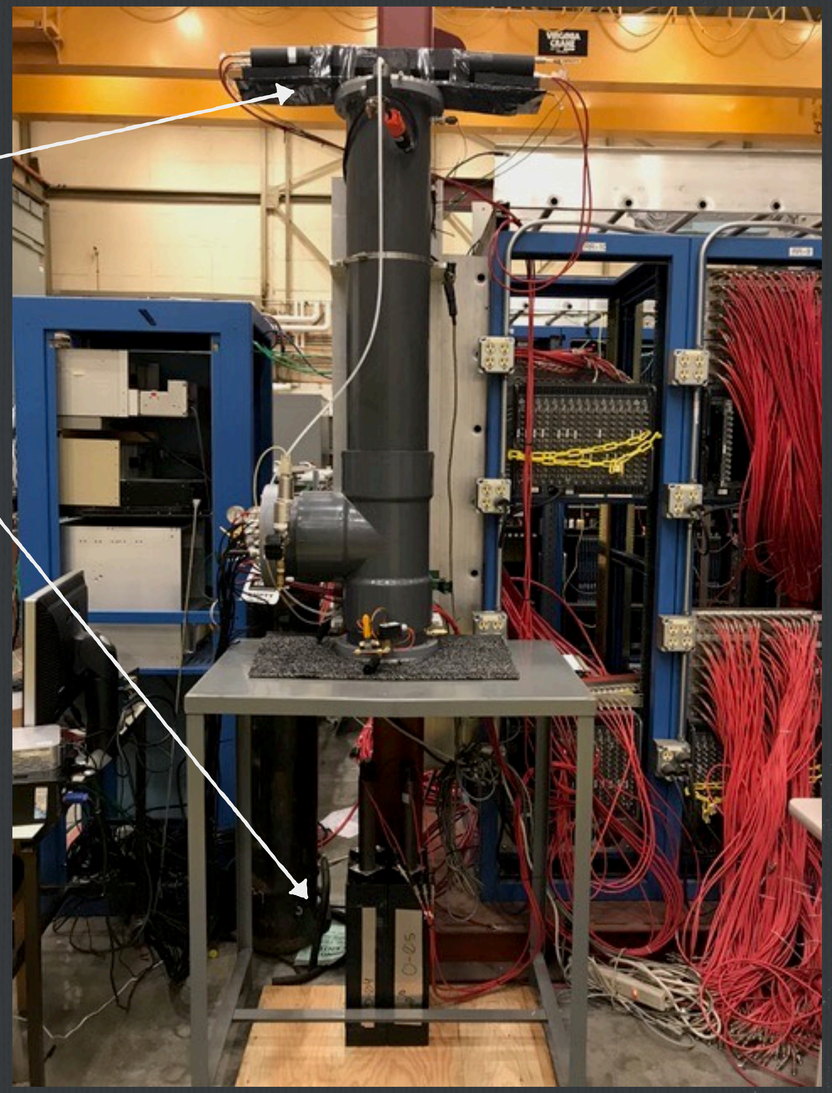

Small Cherenkov Prototype

- Formerly known as the "bazooka" cherenkov.
  - Goal: To test a small MaPMT array under high rate (parasitic)
  - Set up at the test-lab at JLAB.
  - Cosmic tests have been performed.

The 64 pixels from each MaPMT is divided into 16 pixel sums (quadrants) and signal is passed via BNC connector

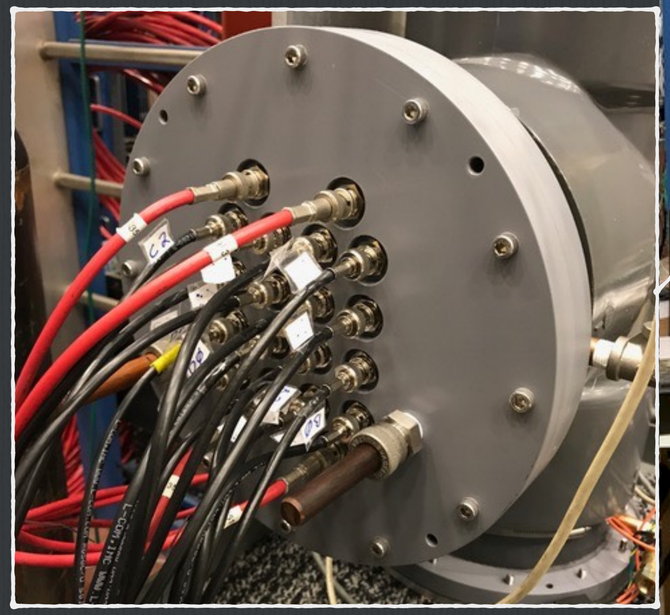

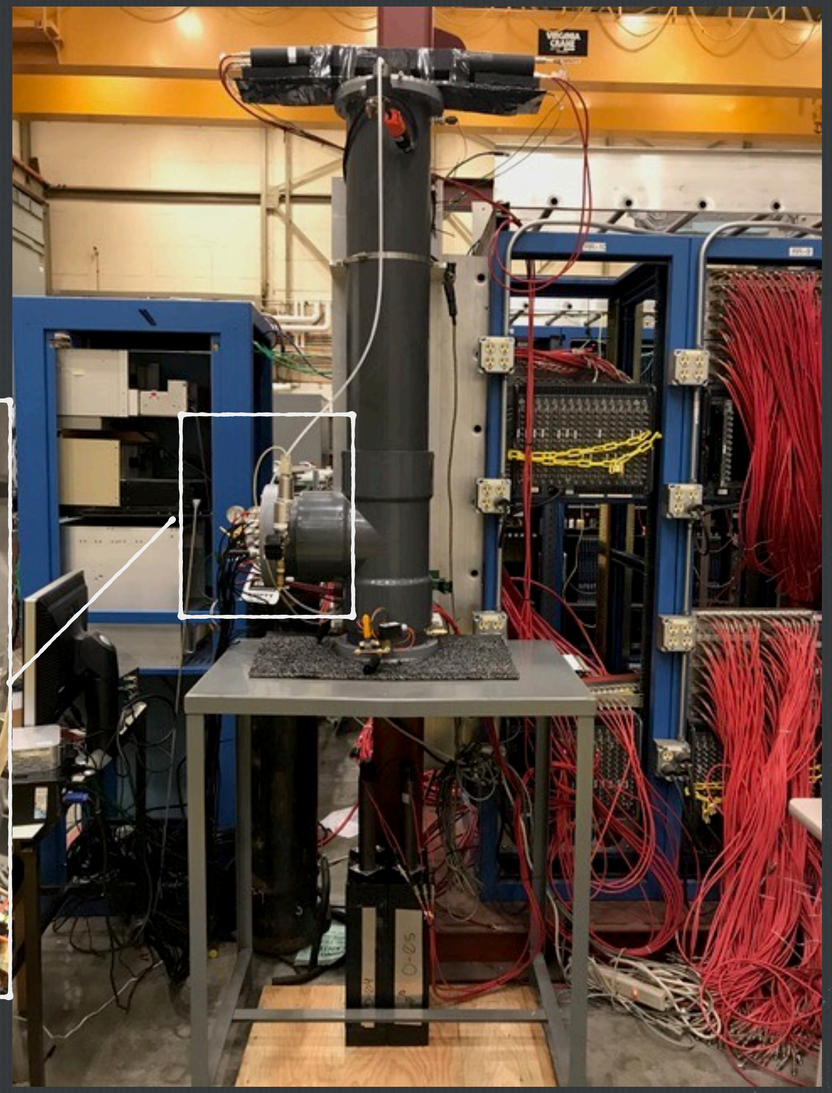

Small Cherenkov Prototype

- Formerly known as the "bazooka" cherenkov.
  - Goal: To test a small MaPMT array under high rate (parasitic)
  - Set up at the test-lab at JLAB.
  - Cosmic tests have been performed.

The 64 pixels from each MaPMT is divided into 16 pixel sums (quadrants) and signal is passed via BNC connector

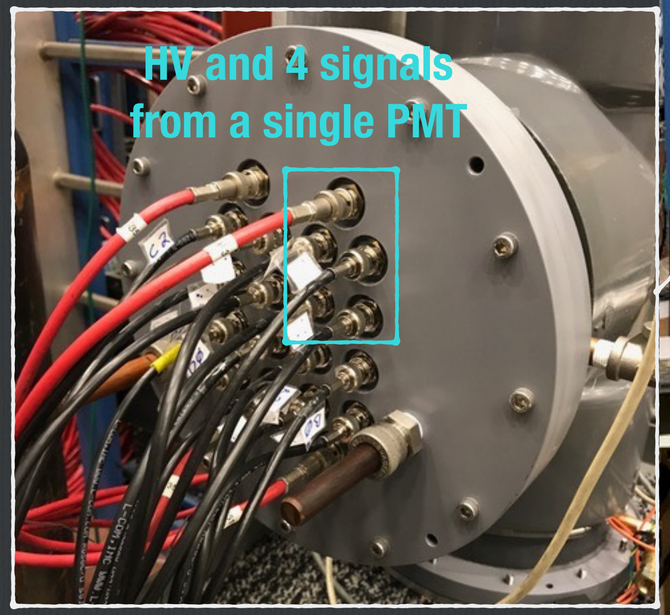

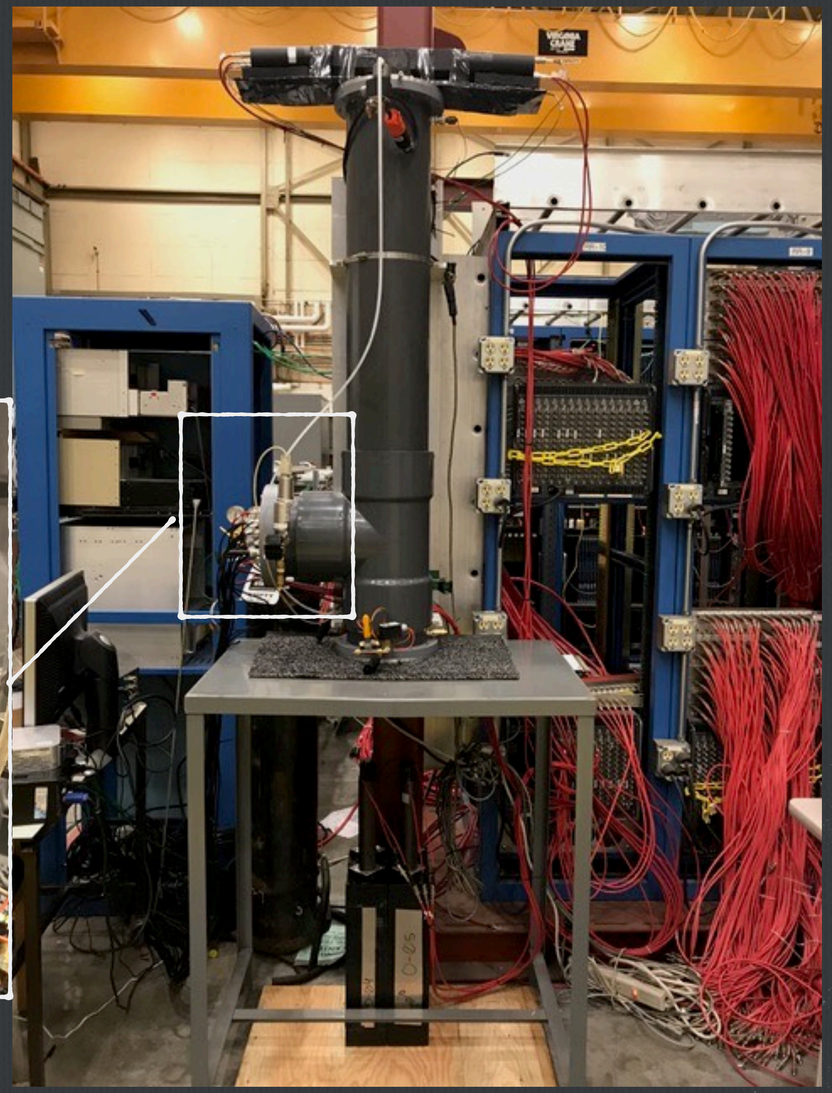

Small Cherenkov Prototype

- Formerly known as the "bazooka" cherenkov.
  - Goal: To test a small MaPMT array under high rate (parasitic)
  - Set up at the test-lab at JLAB.
  - Cosmic tests have been performed.

Looking from the front:

LED extendible arm
Flocking on internal walls
PMT array (reflection)

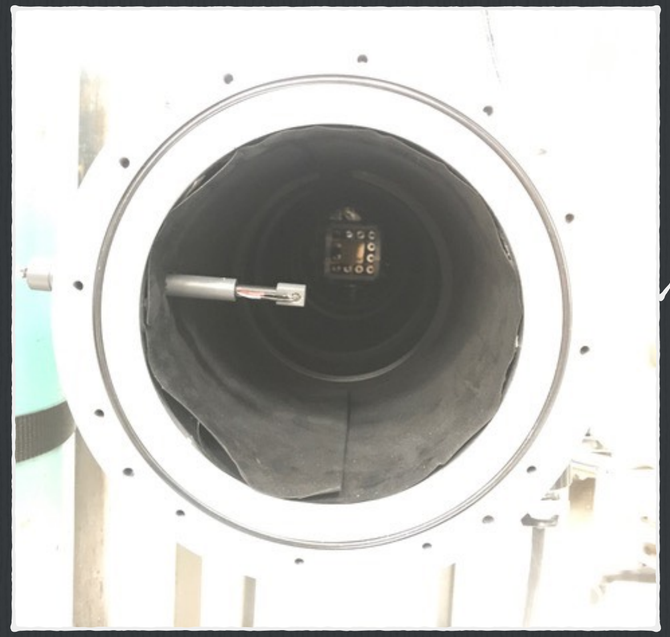

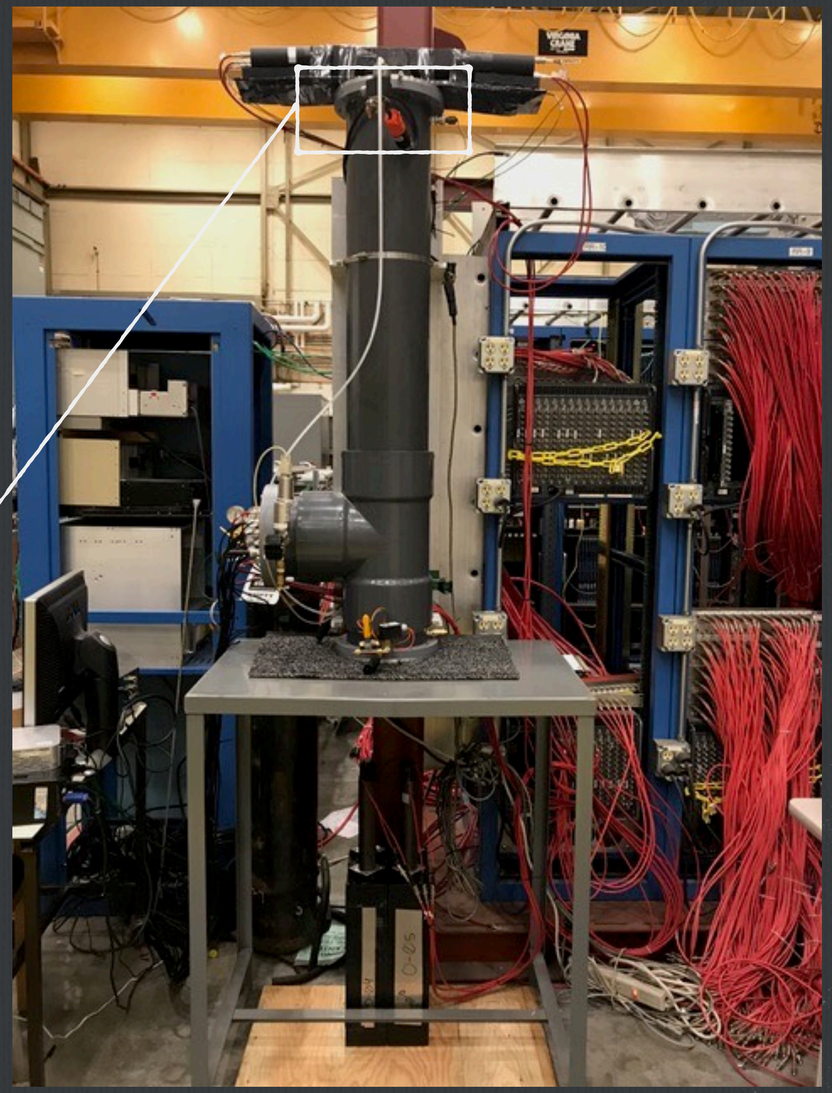

Small Cherenkov Prototype

- Formerly known as the "bazooka" cherenkov.
  - Goal: To test a small MaPMT array under high rate (parasitic)
  - Set up at the test-lab at JLAB.
  - Cosmic tests have been performed.

Gas system will maintain a slightly positive gas pressure.
(Previously used for the SANE Cherenkov)

Small Cherenkov Prototype

- Formerly known as the "bazooka" cherenkov.
  - Goal: To test a small MaPMT array under high rate (parasitic)
  - Set up at the test-lab at JLAB.
  - Cosmic tests have been performed.

Cosmic event signal (single PMT)

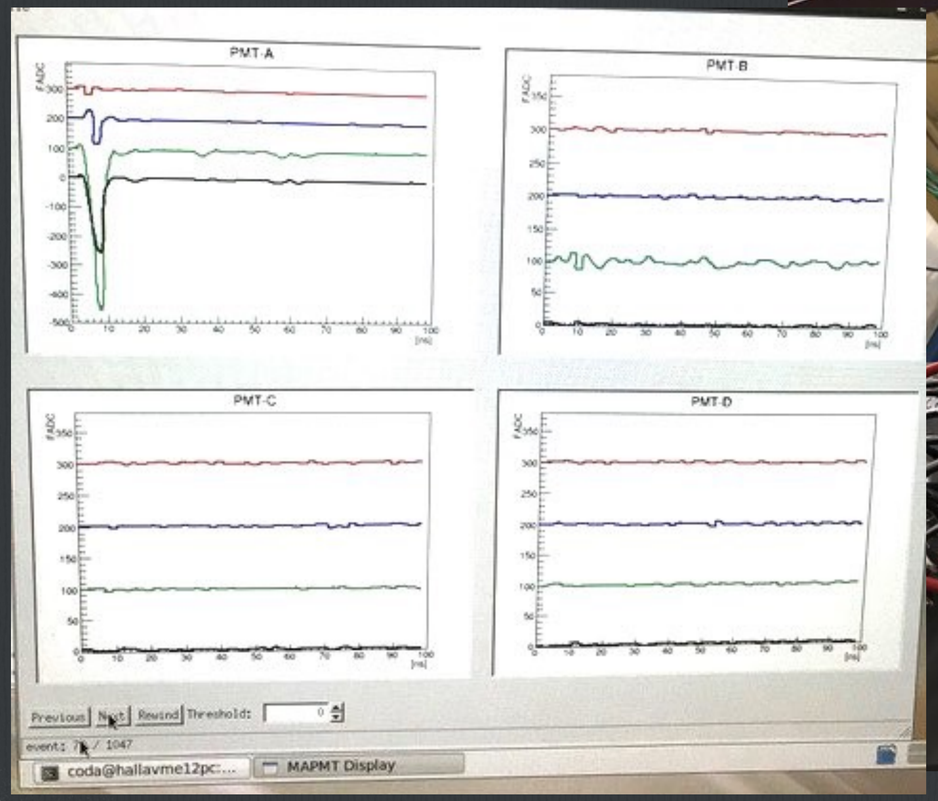

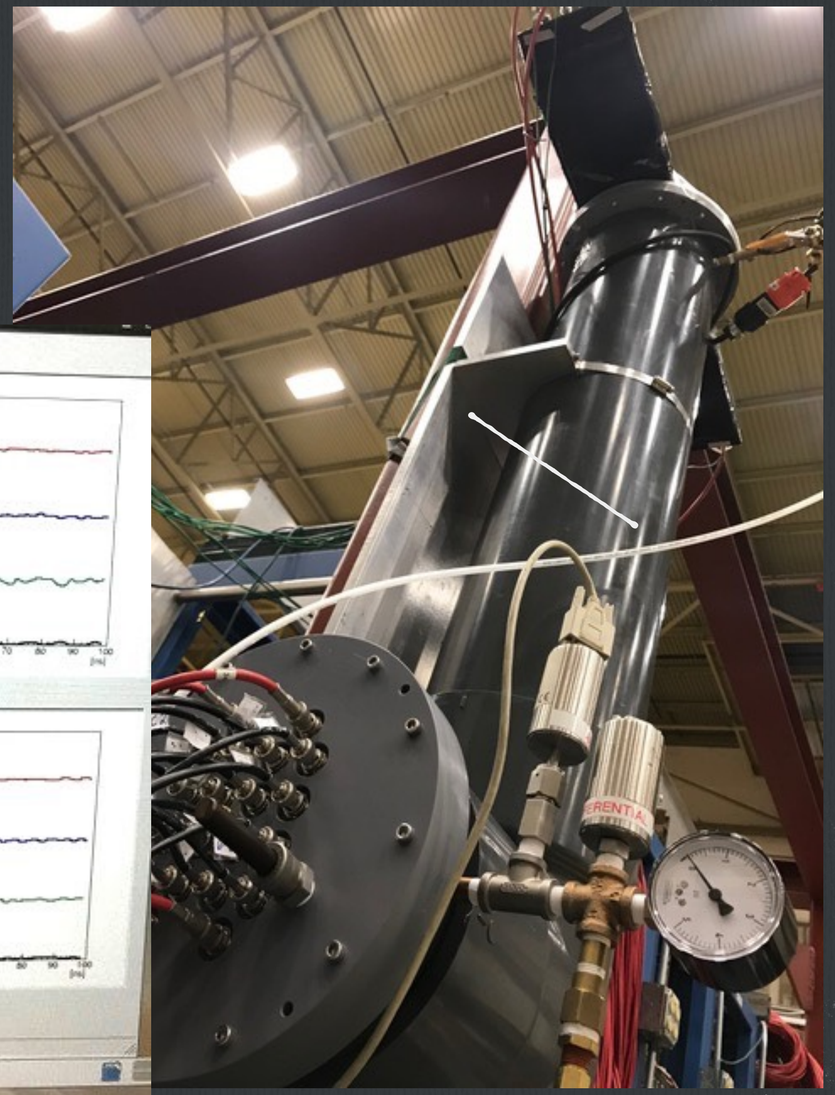

Small Cherenkov Prototype

- Formerly known as the "bazooka" cherenkov.
  - Goal: To test a small MaPMT array under high rate (parasitic)
  - Set up at the test-lab at JLAB.
  - Cosmic tests have been performed.

Cosmic event signal (2 PMTs)

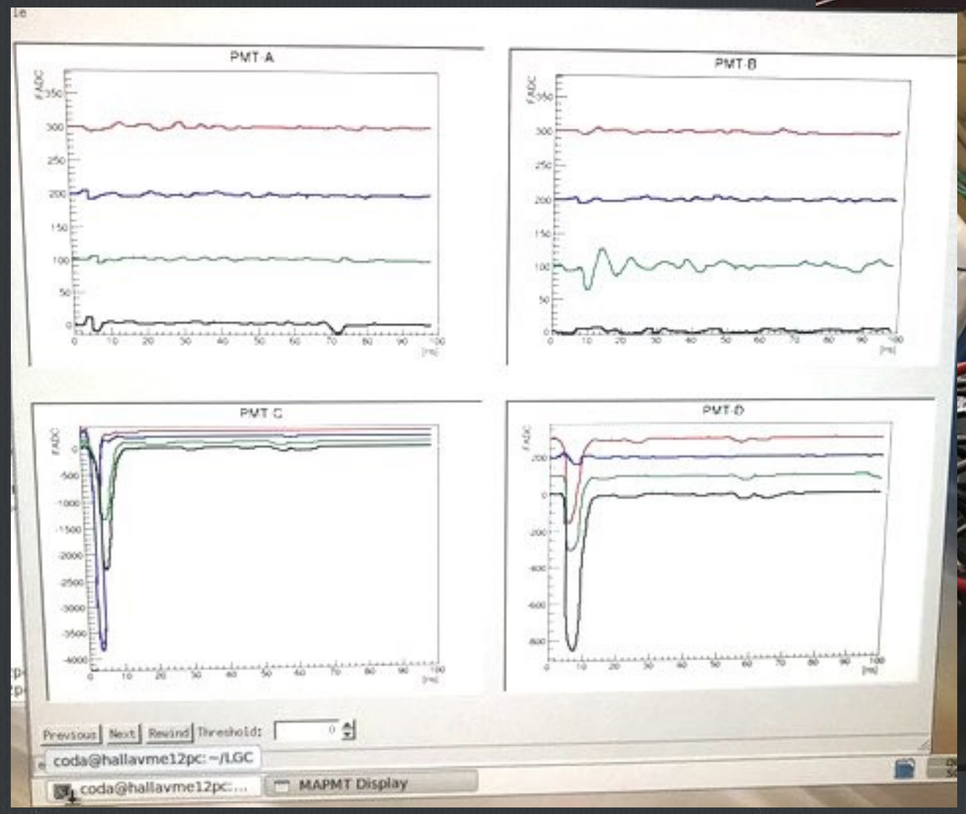

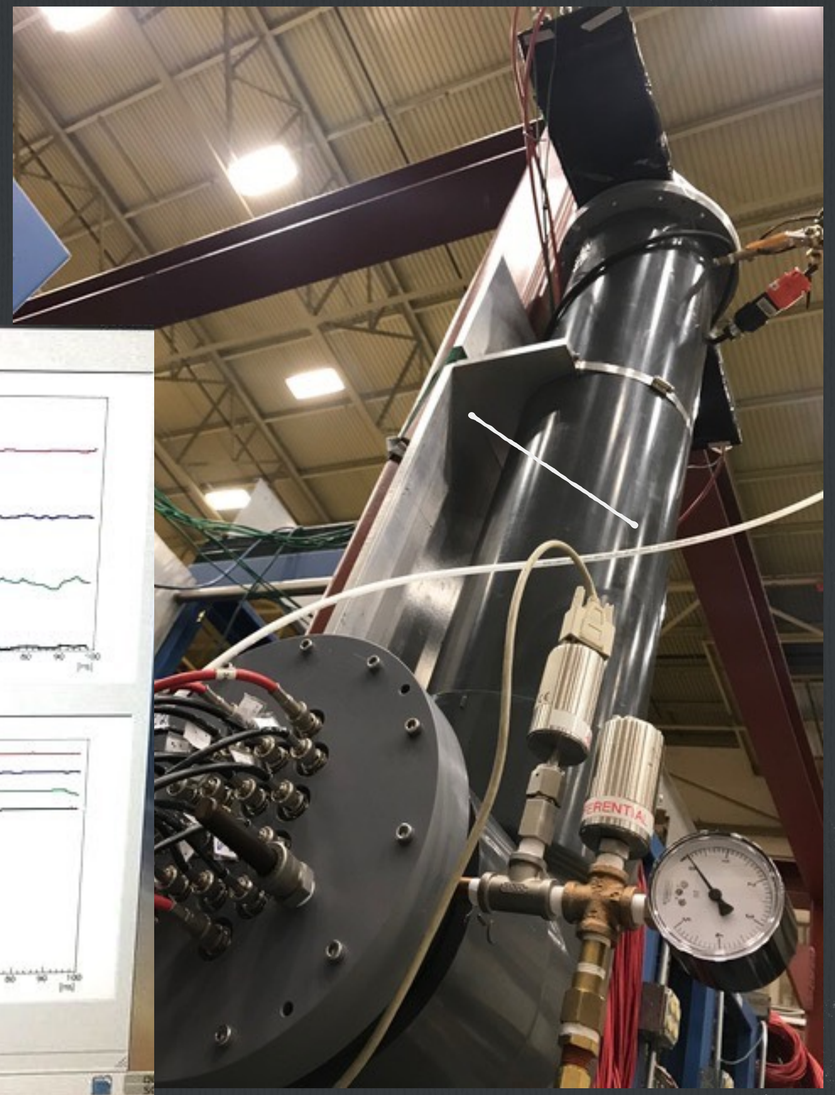

New (Larger) Cherenkov Prototype Proposal

- A newer prototype will (hopefully) be funded for testing large array MaPMTs.
  - Joint effort between Temple, Duke, and JLab.
  - Tank design is similar to previous PVC pipe design (except radius becomes large enough to house 4 x 4 array of MaPMTs.)
- Test high rate with large array of MaPMTs.
  - Test with/without WLS
  - Test with/without MAROC readout
  - Test with N2 / C4F10 gas.
  - Magnetic shielding designs will also be tested.

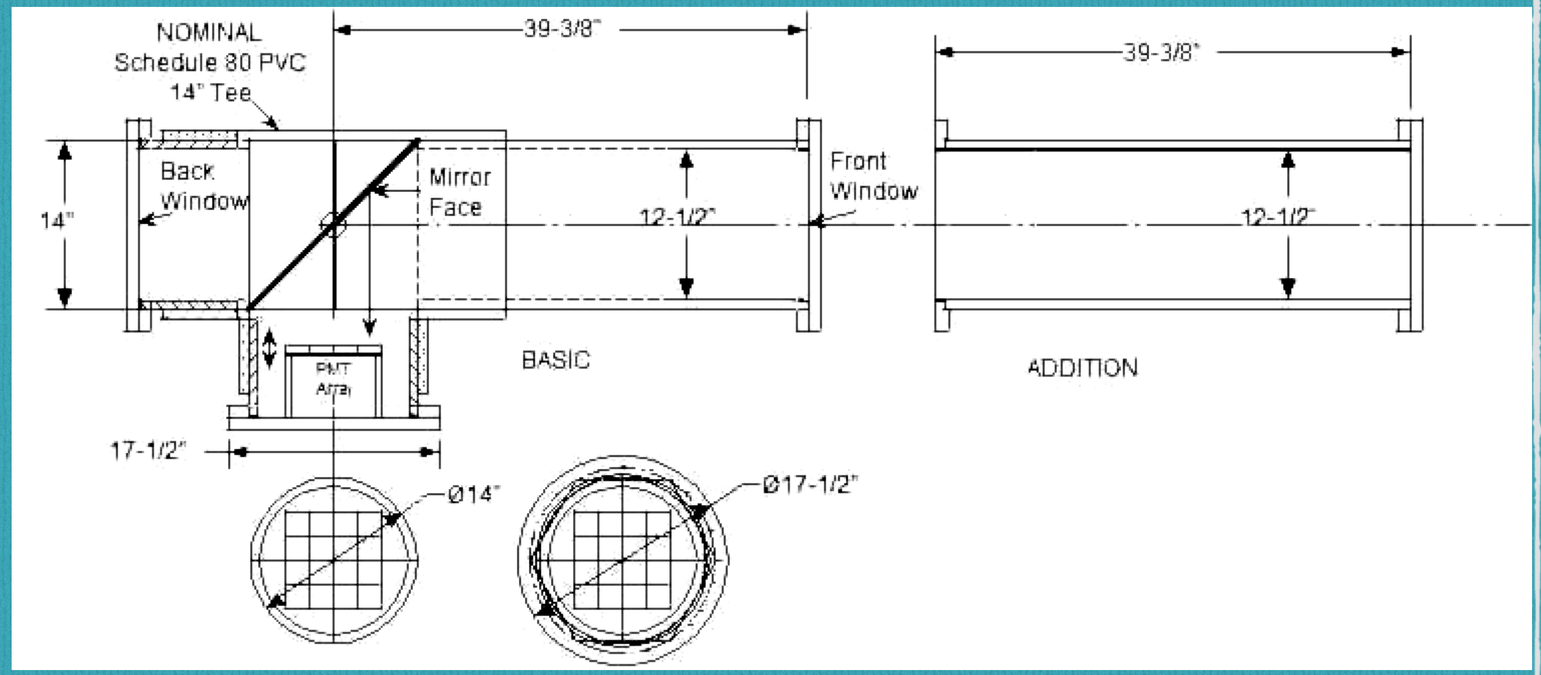

New (Larger) Cherenkov Prototype Proposal

- A newer prototype will (hopefully) be funded for testing large array MaPMTs.
  - Joint effort between Temple, Duke, and JLab.
  - Tank design is similar to previous PVC pipe design (except radius becomes large enough to house 4 x 4 array of MaPMTs.)
- Test high rate with large array of MaPMTs.
  - Test with/without WLS
  - Test with/without MAROC readout
  - Test with N2 / C4F10 gas.
  - Magnetic shielding designs will also be tested.

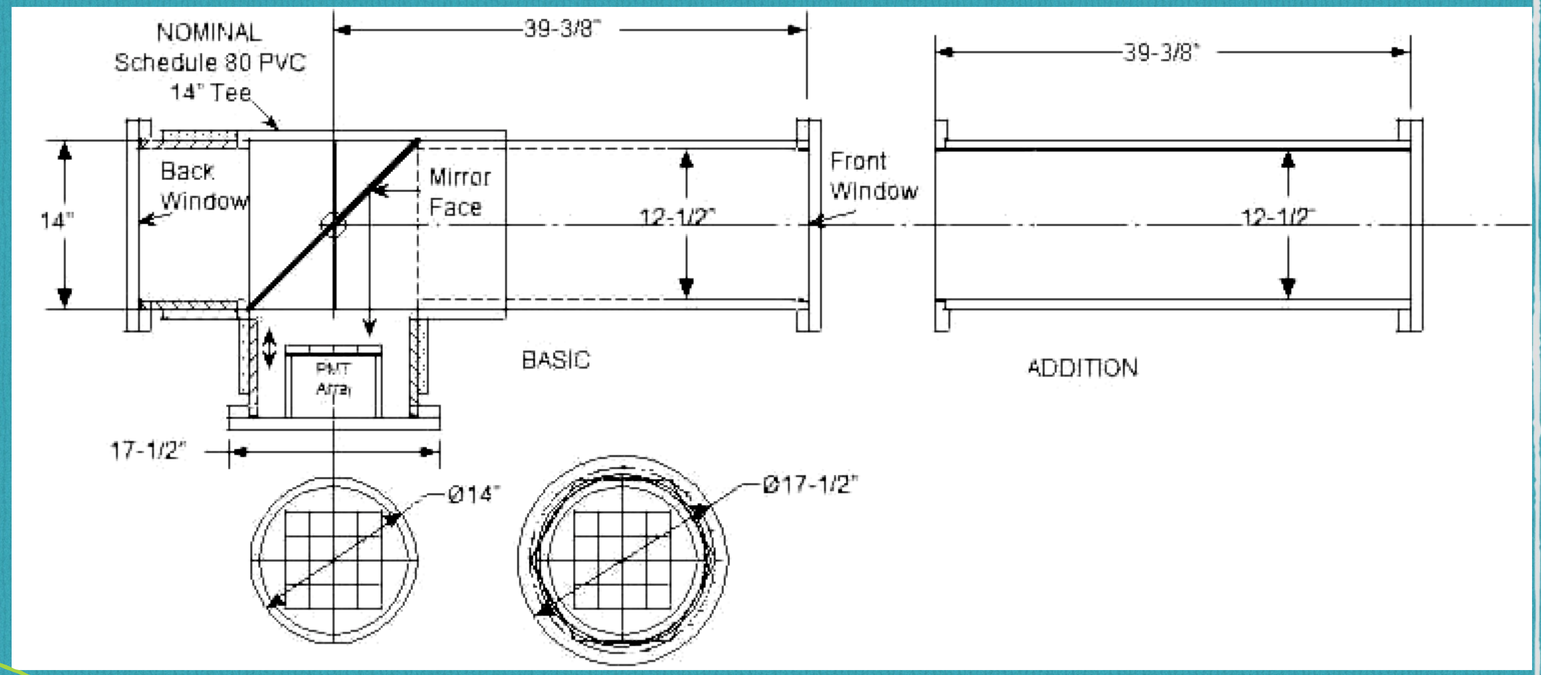

How does WLS affect cross-talk between MaPMT pixels, and over-all signal quality.

New (Larger) Cherenkov Prototype Proposal

- A newer prototype will (hopefully) be funded for testing large array MaPMTs.
  - Joint effort between Temple, Duke, and JLab.
  - Tank design is similar to previous PVC pipe design (except radius becomes large enough to house 4 x 4 array of MaPMTs.)
- Test high rate with large array of MaPMTs.
  - Test with/without WLS
  - Test with/without MAROC readout
  - Test with N2 / C4F10 gas.
  - Magnetic shielding designs will also be tested.

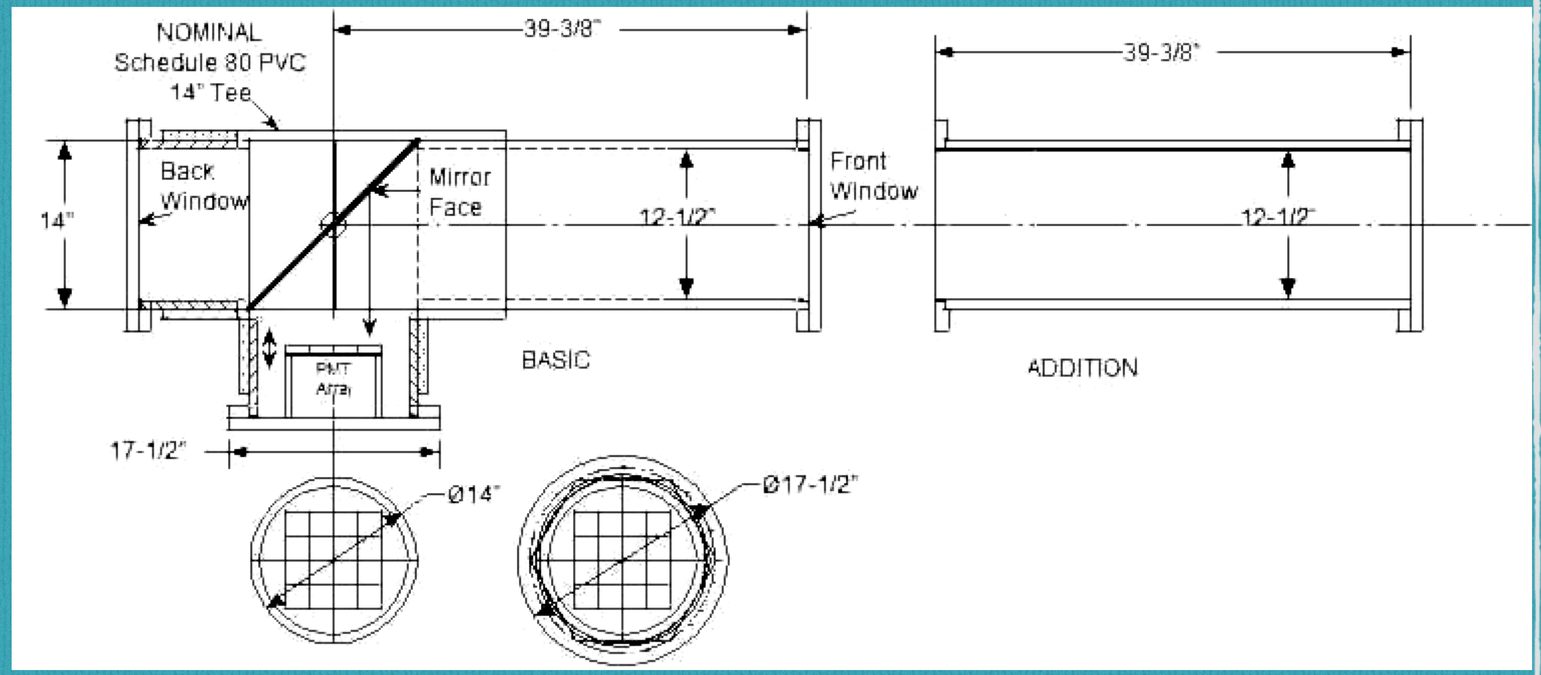

Can we utilize the digitized pixel-by-pixel output (trigger level? RICH like signals?)

New (Larger) Cherenkov Prototype Proposal

- A newer prototype will (hopefully) be funded for testing large array MaPMTs.
  - Joint effort between Temple, Duke, and JLab.
  - Tank design is similar to previous PVC pipe design (except radius becomes large enough to house 4 x 4 array of MaPMTs.)
- Test high rate with large array of MaPMTs.
  - Test with/without WLS
  - Test with/without MAROC readout
  - Test with N2 / C4F10 gas.
  - Magnetic shielding designs will also be tested.

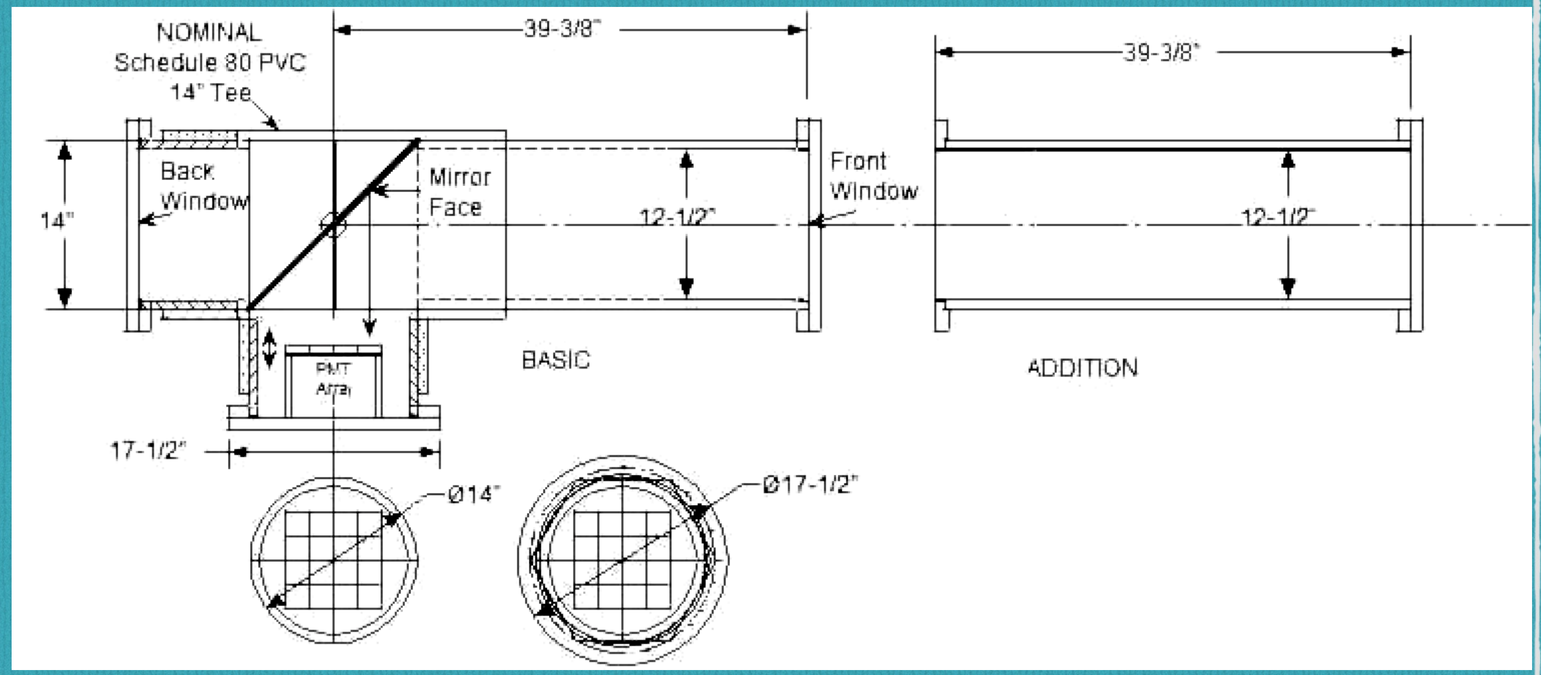

Gas effects (scintillation, electronics interaction?)

New (Larger) Cherenkov Prototype Proposal

- A newer prototype will (hopefully) be funded for testing large array MaPMTs.
  - Joint effort between Temple, Duke, and JLab.
  - Tank design is similar to previous PVC pipe design (except radius becomes large enough to house 4 x 4 array of MaPMTs.)
- Test high rate with large array of MaPMTs.
  - Test with/without WLS
  - Test with/without MAROC readout
  - Test with N2 / C4F10 gas.
  - Magnetic shielding designs will also be tested. → Large array shielding is not trivial (shield each pmt? square, round, other shape?)

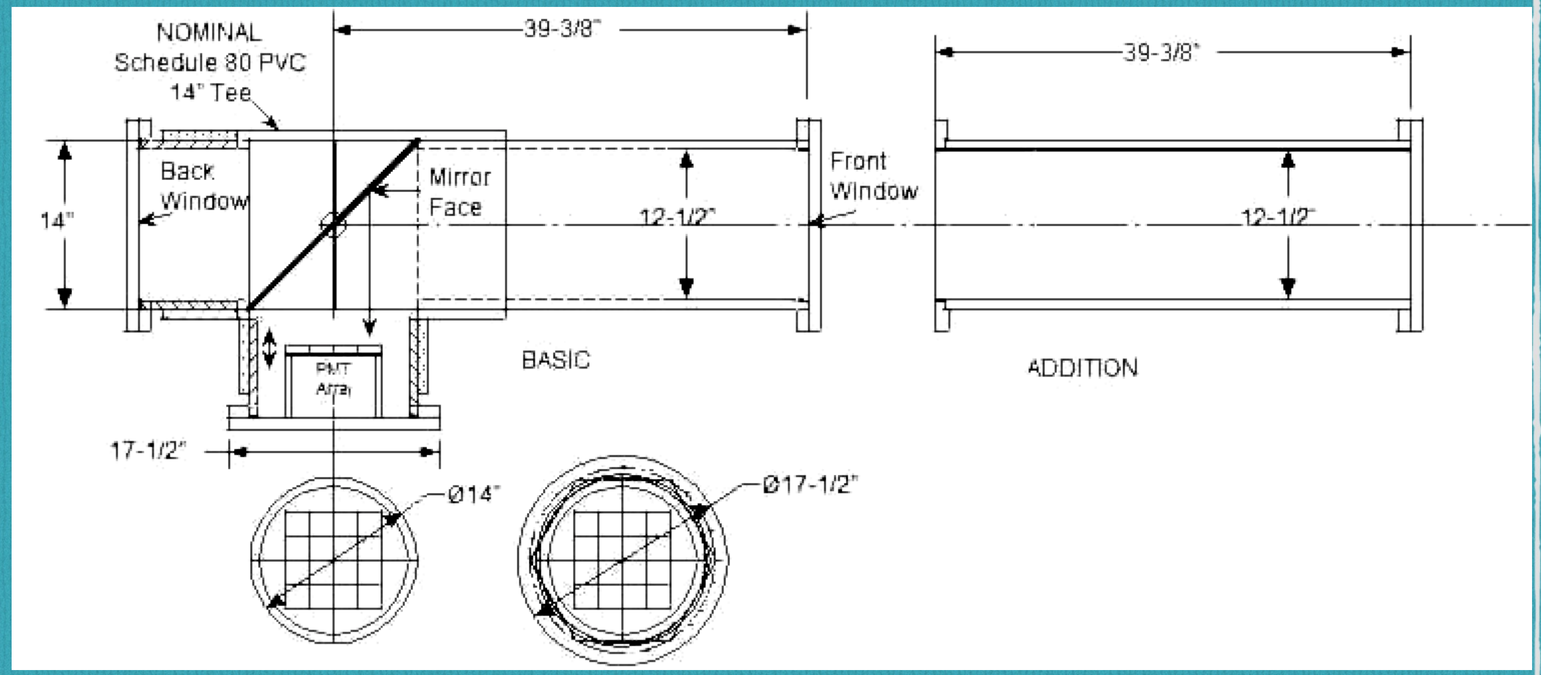

New (Larger) Cherenkov Prototype Proposal

- A newer prototype will (hopefully) be funded for testing large array MaPMTs.
  - Joint effort between Temple, Duke, and JLab.
  - Tank design is similar to previous PVC pipe design (except radius becomes large enough to house 4 x 4 array of MaPMTs.)
- Test high rate with large array of MaPMTs.
  - Test with/without WLS
  - Test with/without MAROC readout
  - Test with N2 / C4F10 gas.
  - Magnetic shielding designs will also be tested.

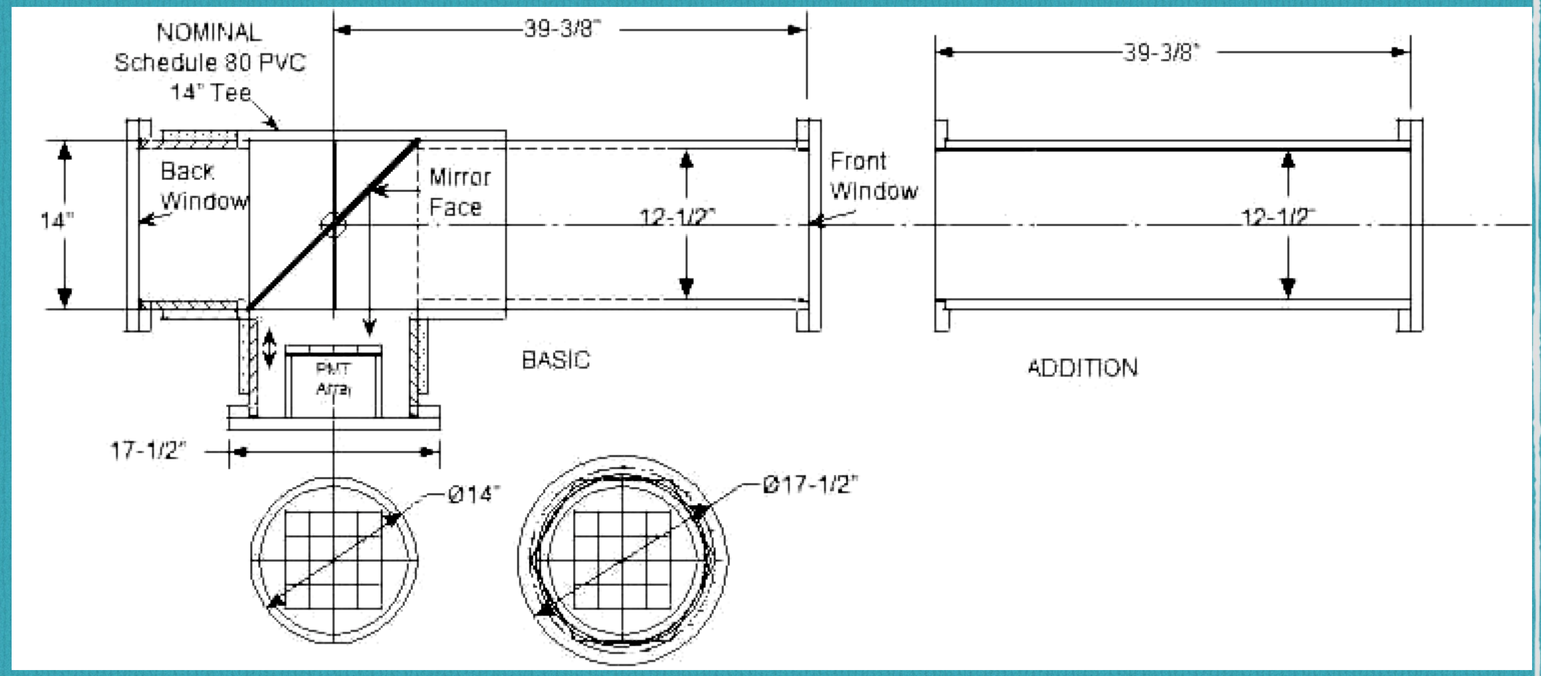

How do all effects compound under high-rate conditions?

New (Larger) Cherenkov Prototype Proposal

- A newer prototype will (hopefully) be funded for testing large array MaPMTs.
  - Joint effort between Temple, Duke, and JLab.
  - Tank design is similar to previous PVC pipe design (except radius becomes large enough to house 4 x 4 array of MaPMTs.)
- Test high rate with large array of MaPMTs.
  - Test with/without WLS
  - Test with/without MAROC readout
  - Test with N2 / C4F10 gas.
  - Magnetic shielding designs will also be tested.

High Rate Test of MaPMT Arrays Using a Prototype Telescopic Cherenkov Device

Sylvester Joosten, Zein-Eddine Meziani, Michael Paolone, Nikolaos Sparveris
Temple University

Haiyan Gao, Chao Gu, Zhiwen Zhao
Duke University

Alexander Camsonne, Jian-Ping Chen
Thomas Jefferson National Accelerator Facility

June 7, 2018

1 Introduction

Today, many scattering experiments in nuclear and particle physics designed to address the most compelling science questions require high intensity probe beams in order to provide the necessary luminosity to either measure rare processes with high statistical precision or search for new phenomena. Examples of

Three year proposal includes: construction, bench tests, calibration, parasitic data collection of multiple configurations, and analysis of results.

Simulations: Small angle SIDIS efficiency

- Simulated with detector optimized for 10cm farther downstream.
- Change of "optimization angle" for primary mirror of 11.3 deg to 8.5 deg in SIDIS configuration.
  - Effects PVDIS since same mirror is used (but rotated)

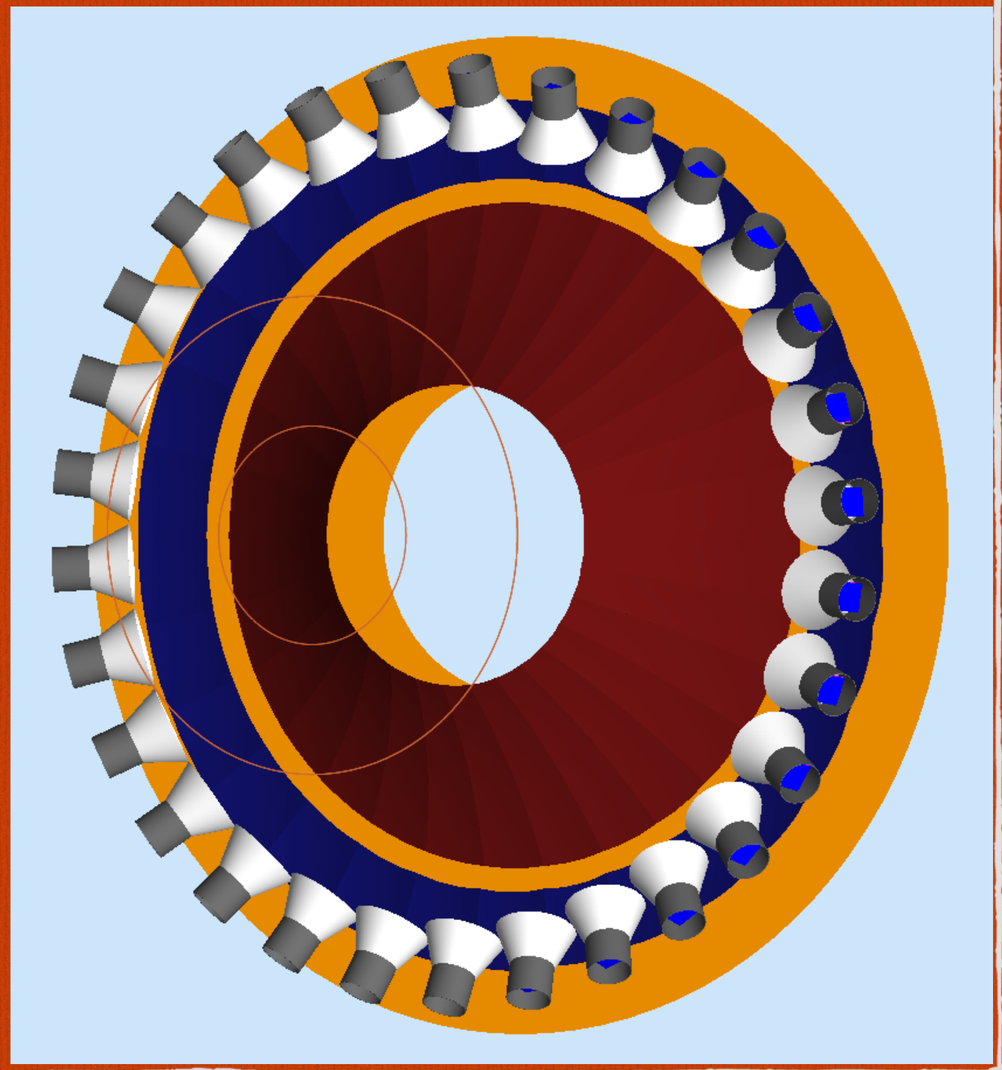

Small Angle Optimized:
8.5 deg optimized
R = 273.9 cm
L = 116.7 cm

Original Mirror:
11.3 deg optimized
R = 361.5 cm
L = 118.3 cm

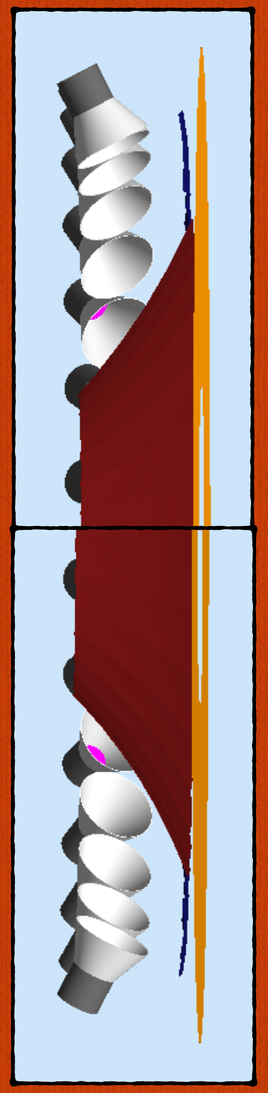

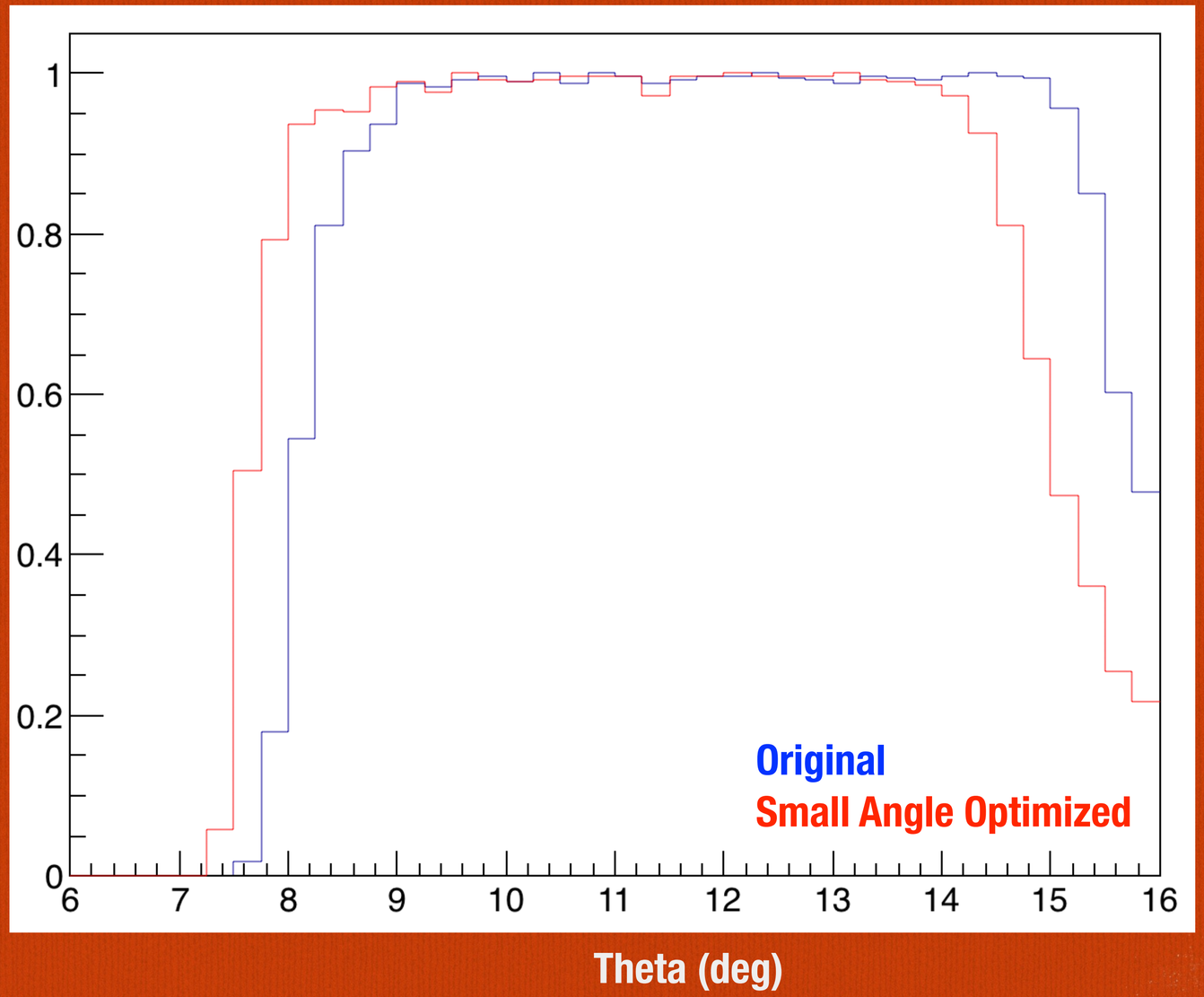

Thoughts on simulation with new z-location

- Slightly changes mirror location/coveraage in radial direction.
- Does increase the range of reflected light over desired angular acceptance (especially in PVDIS)
  - Cone orientation alone cannot get good coverage at all desired PVDIS angles.
  - Need to revisit the cone size/slope.
    - Need to re-optimize and take care to maintain phi acceptance.

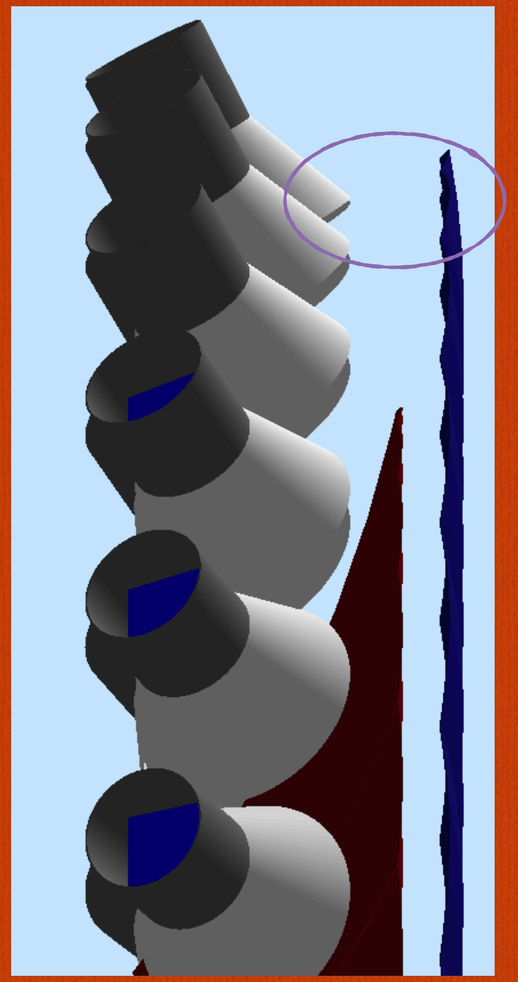

Thoughts on simulation with new z-location

- Slightly changes mirror location/coveraage in radial direction.
- Does increase the range of reflected light over desired angular acceptance (especially in PVDIS)
  - Cone orientation alone cannot get good coverage at all desired PVDIS angles.
  - Need to revisit the cone size/slope.
    - Need to re-optimize and take care to maintain phi acceptance.

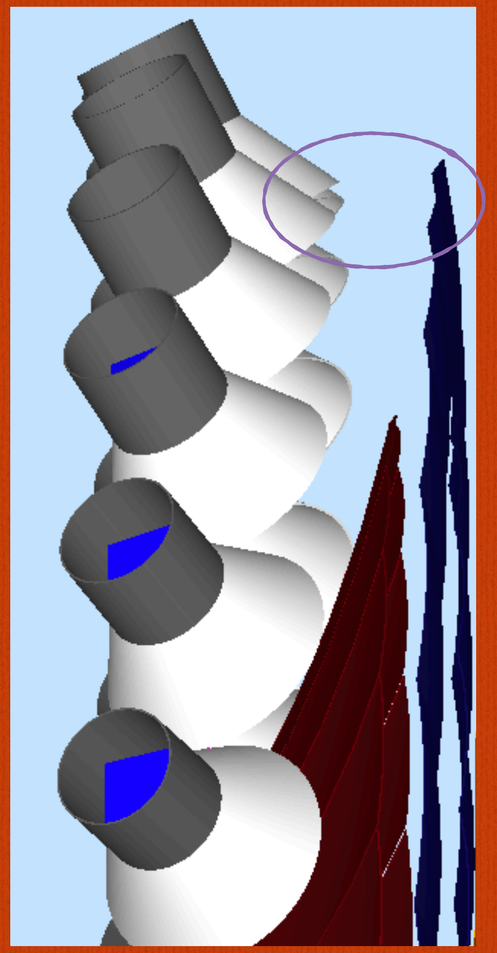

Shorter cone half-length

Next Steps:

- ☐ Small prototype:
  - ☐ Make analyzer software
  - ☐ Prepare for Hall installation (no date known, yet)
- ☐ New prototype:
  - ☐ Finish document before DOE meeting
  - ☐ Create a simulation.
- ☐ Simulation:
  - ☐ Optimize cone light collection for new z in SIDS(J/psi)/PVDIS configuration.
  - ☐ Finalize optimization of mirrors.