REV	DESCRIPTION	DRN	CHK	APP	DATE
D	SA-350-620-06 PO				

NOTES: (UNLESS OTHERWISE SPECIFIED)

1. EXCEPT AS NOTED, DIMENSIONS ARE IN MILLIMETERS.

2. THE MINIMUM GAP BETWEEN PLATES SHALL BE SUCH THAT A GAUGE 1219 X 508 X 22 MILLIMETERS THICK WILL HAVE A FREE FIT IN ALL PARTS OF EACH GAP AFTER ALL WELDING IS COMPLETED.

3. THE MINIMUM GAP BETWEEN PLATES SHALL BE SUCH THAT A GAUGE 75 X 100 X 29 MILLIMETERS THICK WILL HAVE A FREE FIT FOR THE FIRST 75mm OF EACH END OF EACH GAP AFTER ALL WELDING IS COMPLETED.

4. MARK WEIGHT (40 MT) IN TWO VISIBLE LOCATIONS WITH WHITE LETTERS 150mm HIGH.

5. TO BE MACHINED

6. WELDS ARE TO CONFORM TO AWS D1.1 AS LATEST AMENDED OR EQUIVALENT.

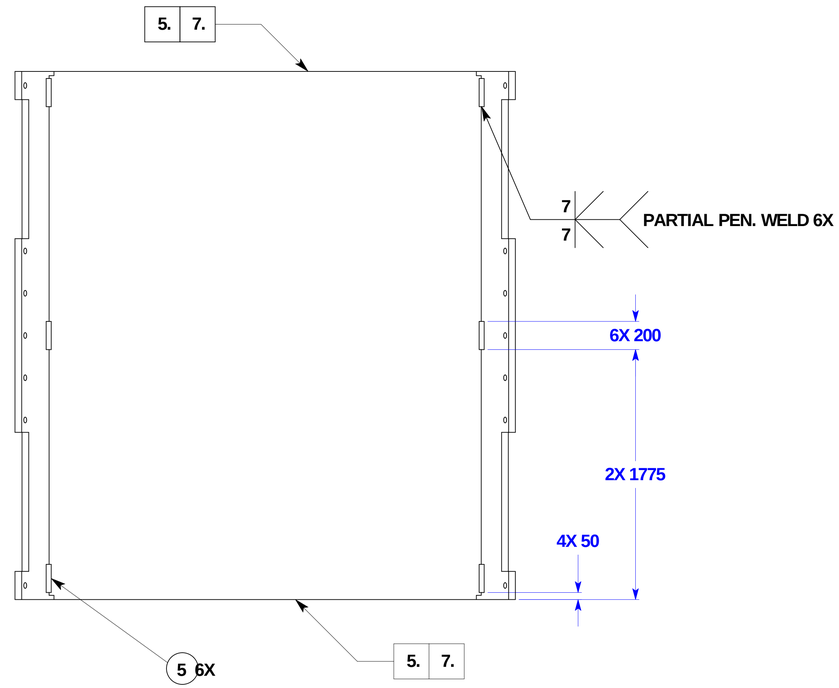

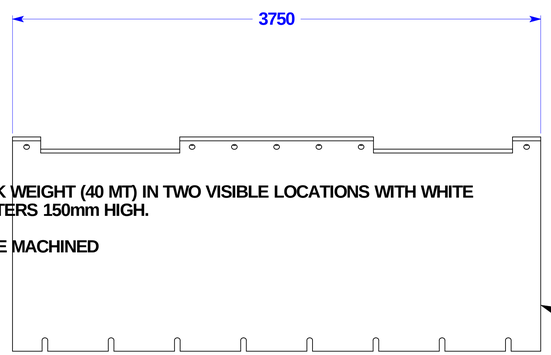

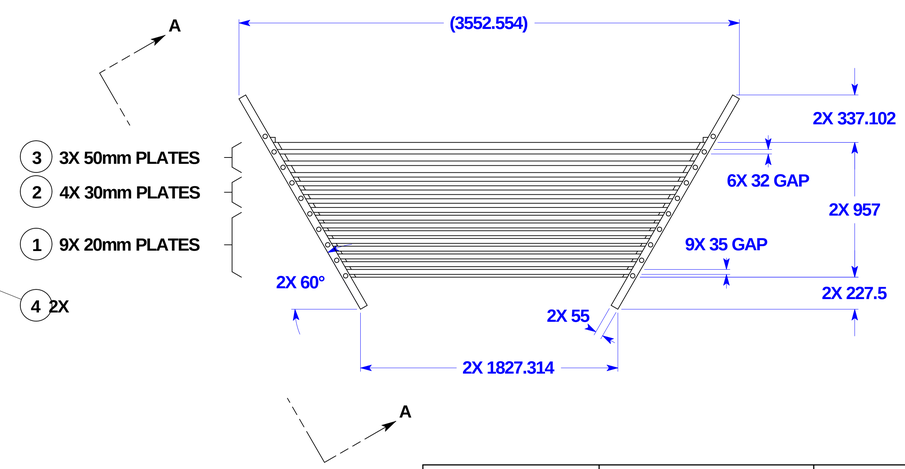

ITEM NO	PREF	BAS	SUFF	TITLE OR DESCRIPTION	QTY
	STOCK OR PART NO				
6	-	-	-	KEENSERT CL-789-KS	40
5	-	-	-	BAR, STEEL,36mmX36MMX200MM	AR
4	-	-	-	PLATE, STEEL, 55mm THICK	AR
3	-	-	-	PLATE, STEEL, 50mm THICK	AR
2	-	-	-	PLATE, STEEL, 30mm THICK	AR
1	-	-	-	PLATE, STEEL, 20mm THICK	AR

DO NOT SCALE DRAWING

CAD FILE NAME: SA35062006.P0

SA-350-620-00

NEXT ASSEMBLIES:

DIMENSIONING AND TOLERANCING IS IN ACCORDANCE WITH ANSI Y14.5M-1982.

UNLESS OTHERWISE SPECIFIED
DIMENSIONS ARE IN MILLIMETERS
TOLERANCES
BREAK EDGES .005-.015
INTERNAL CORNERS .015 R MAX
FRACTIONS ± ---
DEC .XX ± ---
.XXX ± ---
.XXXX ± ---
ALL SURFS ---

SCALE: 1 : 20

STANFORD LINEAR ACCELERATOR CENTER
U.S. DEPARTMENT OF ENERGY
STANFORD UNIVERSITY STANFORD, CALIFORNIA

PROPRIETARY DATA OF STANFORD UNIVERSITY AND/OR U. S. DEPARTMENT OF ENERGY. RECIPIENT SHALL NOT PUBLISH THE INFORMATION WITHIN UNLESS GRANTED SPECIFIC PERMISSION OF STANFORD UNIVERSITY.

		DATE
ENGR	R F BOYCE	1/16/96
DRWN	R F BOYCE	1/16/96
CHKD	H J KREBS	3/21/96

APPROVAL	
SR A BELL	3/22/96
H L LYNCH	3/22/96
T O'CONNOR	3/22/96

BABAR DETECTOR BARREL FLUX RETURN INNER WEDGE ASSY

SA-350-620-06 PO D

SH 1 OF 2

BBR BRRL FLX RTN INNER WEDGE

REV	DESCRIPTION	DRN	CHK	APP	DATE
D	SA-350-620-06 PO				

7. COAT WITH AISC CLASS A COATING FOR SLIP-CRITICAL CONNECTIONS.

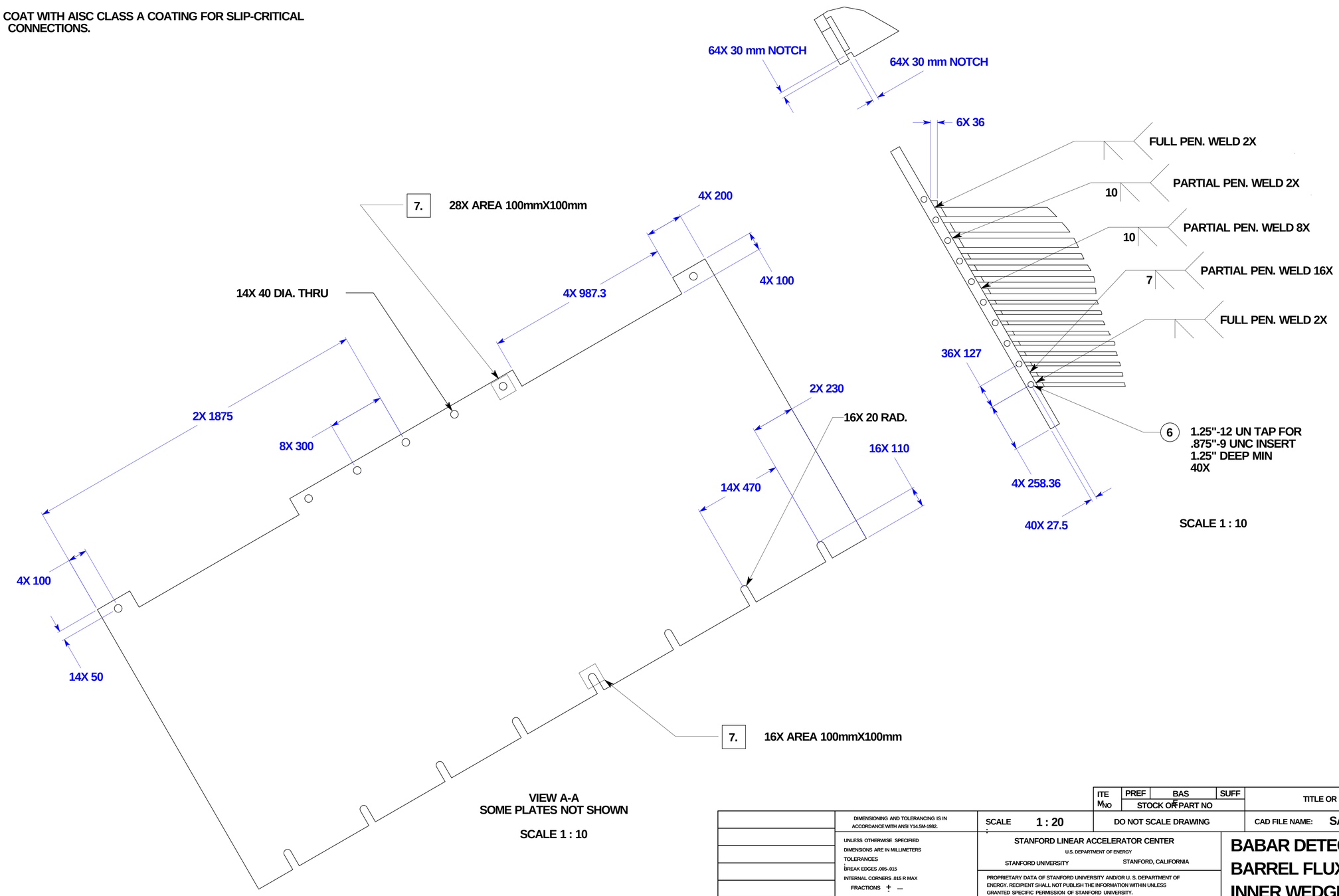

SCALE 1 : 10

VIEW A-A
SOME PLATES NOT SHOWN

SCALE 1 : 10

ITEM No	PREF	BAS	SUFF	TITLE OR DESCRIPTION	QTY
	STOCK OR PART NO				

SCALE 1 : 20 — DO NOT SCALE DRAWING — CAD FILE NAME: SA35062006.P0

DIMENSIONING AND TOLERANCING IS IN ACCORDANCE WITH ANSI Y14.5M-1982.

UNLESS OTHERWISE SPECIFIED
DIMENSIONS ARE IN MILLIMETERS
TOLERANCES
BREAK EDGES .005-.015
INTERNAL CORNERS .015 R MAX
FRACTIONS ± ---
DEC .XX ± ---
.XXX ± ---
.XXXX ± ---
ALL SURFS ---

STANFORD LINEAR ACCELERATOR CENTER
U.S. DEPARTMENT OF ENERGY
STANFORD UNIVERSITY — STANFORD, CALIFORNIA

PROPRIETARY DATA OF STANFORD UNIVERSITY AND/OR U. S. DEPARTMENT OF ENERGY. RECIPIENT SHALL NOT PUBLISH THE INFORMATION WITHIN UNLESS GRANTED SPECIFIC PERMISSION OF STANFORD UNIVERSITY.

		DATE		
ENGR	R F BOYCE	1/16/96	APPROVAL	
DRWN	R F BOYCE	1/16/96	R A BELL	3/22/96
CHKD	H J KREBS	3/21/96	H L LYNCH	3/22/96
			T O'CONNOR	3/22/96

BABAR DETECTOR
BARREL FLUX RETURN
INNER WEDGE ASSY

SA-350-620-00

NEXT ASSEMBLIES:

SA-350-620-06 PO D

SH 2 OF 2

BBR BRRL FLX RTN INNER WEDGE