REVISIONS				
SYM.	ZONE	DESCRIPTION	DATE	APP.
A	F-5 C-2	2.00" DIA. WAS 1.73" DIA. NEW LOCATIONS FOR V_2, V_3, AND V_6 THRU V_{11}. GGD GGD	11-17-86 12/1/86	EN
B		POLE TIP CHANGED. SLOTS AT DETAILS "A" AND "D" ARE DELETED TMK	3/30/87	EN

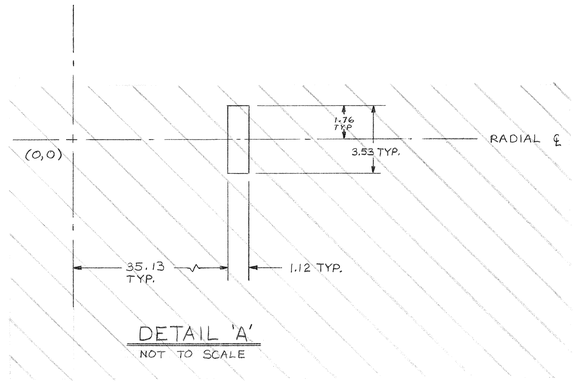

DETAIL 'A'
NOT TO SCALE

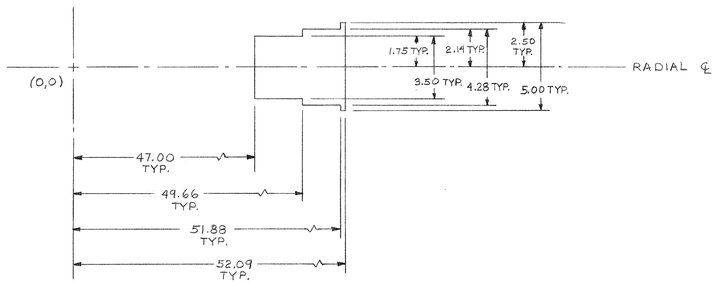

DETAIL 'B'
NOT TO SCALE

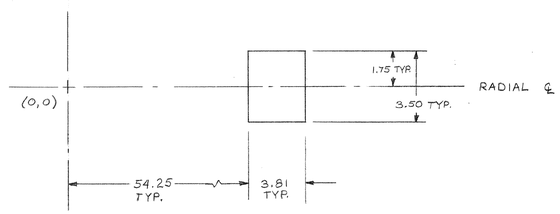

DETAIL 'C'
NOT TO SCALE

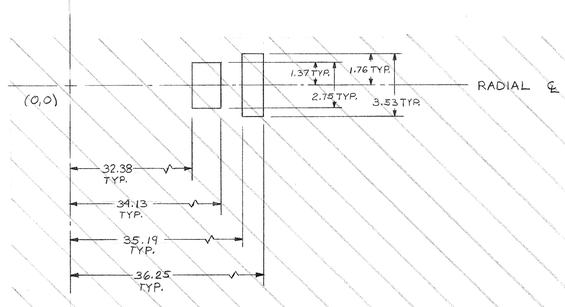

DETAIL 'D'
NOT TO SCALE

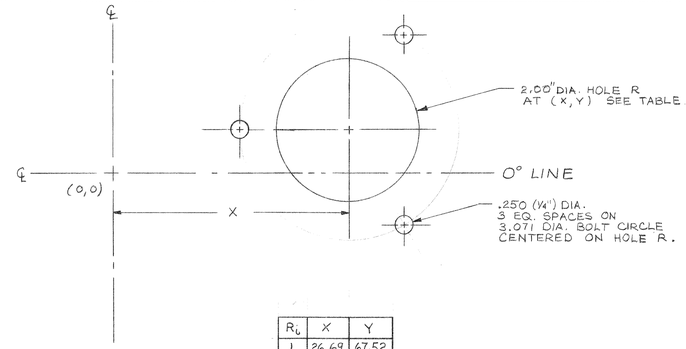

R_i	X	Y
1	26.69	67.52
2	67.52	26.69
3	67.52	-26.69
4	26.69	-67.52

DETAIL 'E'
FULL SCALE

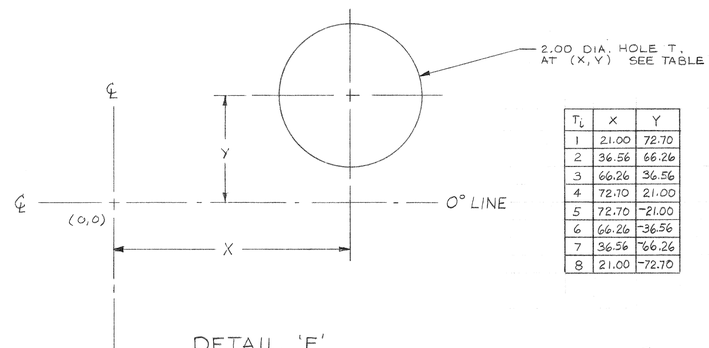

T_i	X	Y
1	21.00	72.70
2	36.56	66.26
3	66.26	36.56
4	72.70	21.00
5	72.70	-21.00
6	66.26	-36.56
7	36.56	-66.26
8	21.00	-72.70

DETAIL 'F'
FULL SCALE

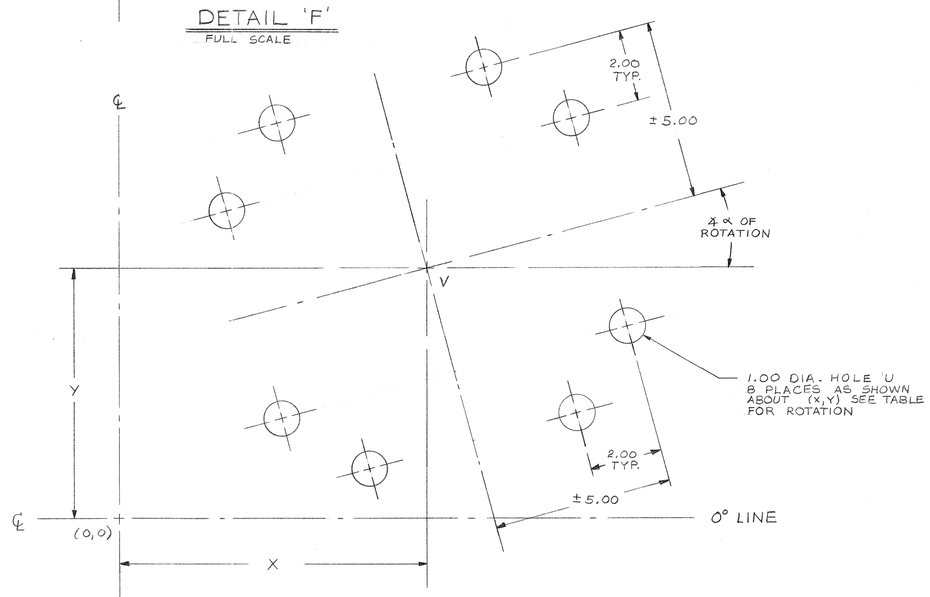

V_i	X	Y	∡α
1	77.15	0.0	0°
2	95.93	11.77	0°
3	96.10	-27.29	0°
4	54.55	54.55	45.0°
5	54.55	-54.55	45.0°
6	87.250	48.656	45.0°
7	87.250	-48.656	45.0°
8	59.097	76.155	45.0°
9	59.097	-76.155	45.0°
10	89.824	65.909	45.0°
11	89.824	-65.909	45.0°

DETAIL 'G'
HALF SCALE

ITEM	DWG. NO.	DESCRIPTION	G1	G2	G3	REMARKS	REV.
			QUANTITY				

PRINT DISTR. GR-1 EN-1

UNLESS OTHERWISE SPECIFIED
DIMENSIONS ARE IN INCHES
TOLERANCES ON:
.00 ±.03
.000
FRACTIONS
ANGLES
ALL SURFACES

CHECKED BY
APPROVED BY

Cornell University
Floyd R. Newman Laboratory of Nuclear Studies – Ithaca, NY 14853-5001

MAGNET YOKE EAST SURFACE
(DETAILS)

DRAWN BY	DRAWN FOR	DATE	SCALE	
GGD	NORDBERG EN	10-16-86	AS SHOWN	D 6052-308 SH. NO. 2 CONT. ON F REV. B

D 6052-308 SH. NO. 2 CONT. ON F REV. B